| | Minimum Sealing Dimension | mm |
|---|---|---|
| a | Pocket To Top & Bottom Edge | 2.95 |
| b | Pocket to Right & Left Edges | 2.45 |
| c | Pocket to Pocket | 2.80 |
| d | Pocket to Vertical Perforation | 2.43 |
| e | Pocket to Horizontal Perforation | 2.70 |

| REVISIONS | | | |
|---|---|---|---|
| REV. | DESCRIPTION | DATE | Drawn By |

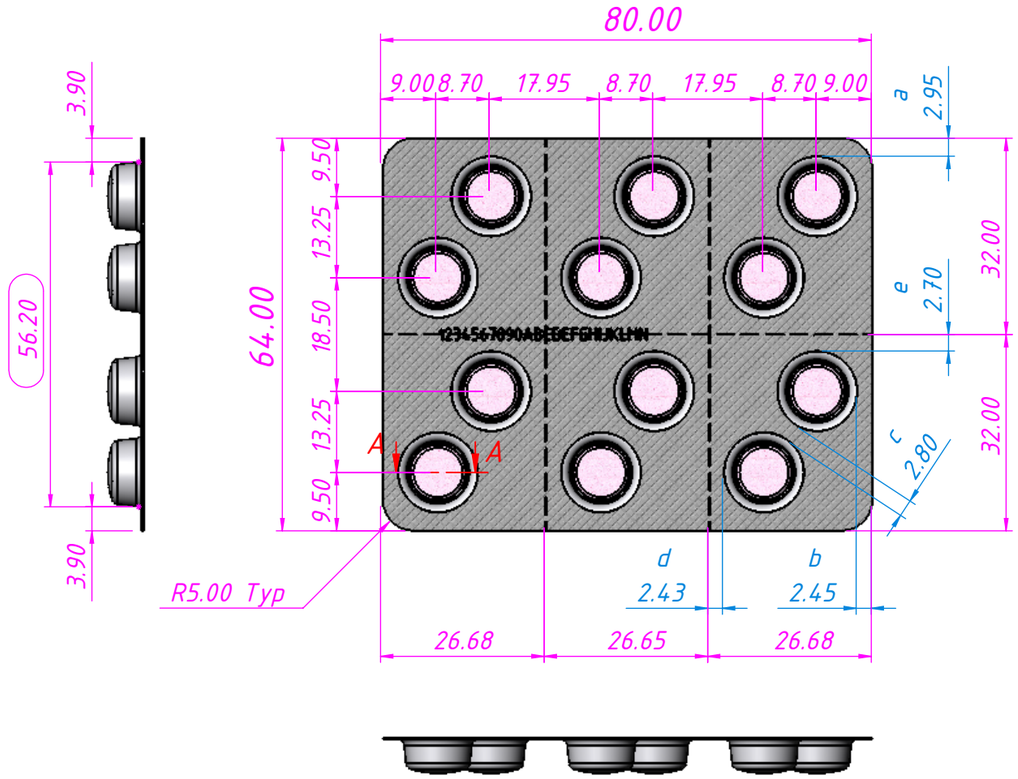


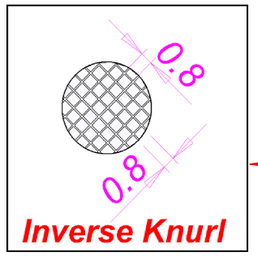


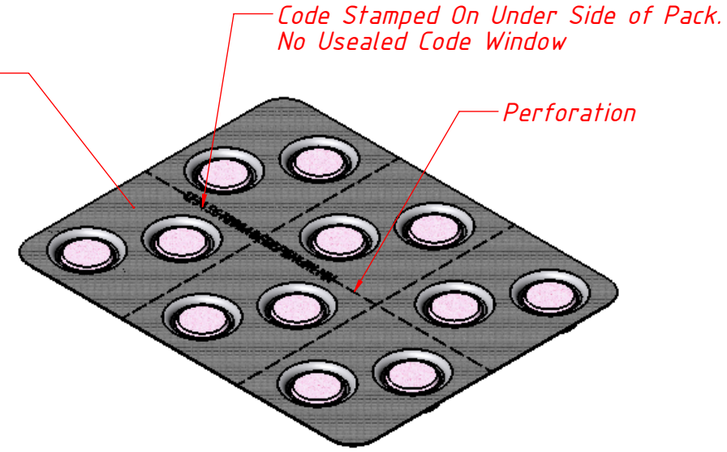


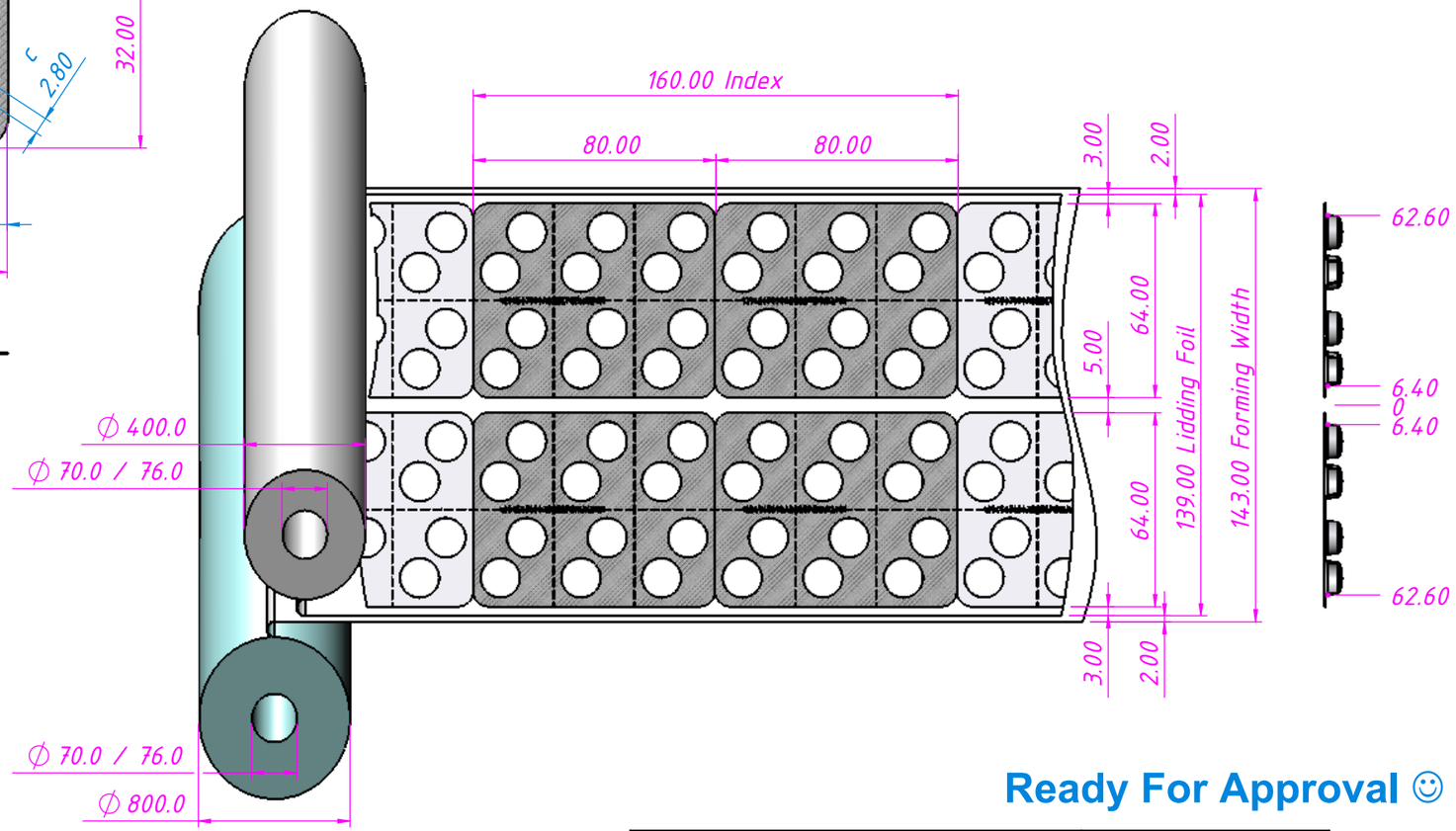


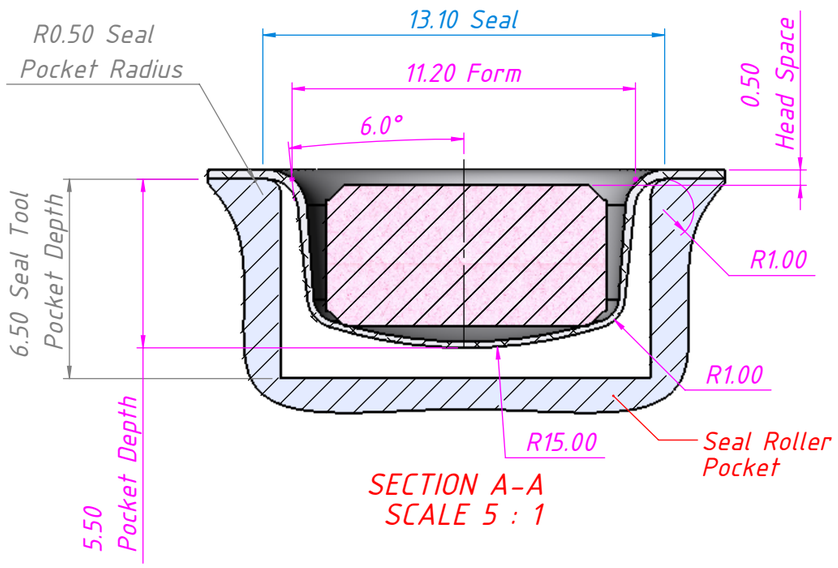


**Ready For Approval ☺**

**Notes:** All dimensions in mm
Forming material: Aclar (300µm)
Lidding material: Alu (20µm)

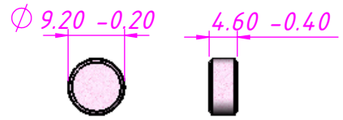


Product Details

| | |
|---|---|
| Feeding system: New Dedicated Vertical Feeder | |
| Guiding: New Dedicated Existing Guide Tracks | |
| Perforation Details: Share Existing Perforation Tool | |
| Cutting Details: Share Existing Punch Tool | |
| Sealing details: Dedicated New Seal Tools Required | |
| DWG. NO. | 6543 |
| Customer | Novartis New Jersey |
| Machine | Bosch TLT1400 |
| Product | Coartem DT F6, 12's |

WEB TRAVEL DIRECTION

Pag. 1 of 1

| | | Date |
|---|---|---|
| Approved | | |
| Drawn by | A. Keane | 13/07/2009 |
| Checked by | F. Mackay | 13/07/2009 |


www.ppc.ie
Tel: +353-1-4513411
Fax: +353-1-4521479
PPC prodieco pharmaceutical components



Drawing Not For External Distrubution without consent of Prodieco Ireland